http://www.AboutBallet.com

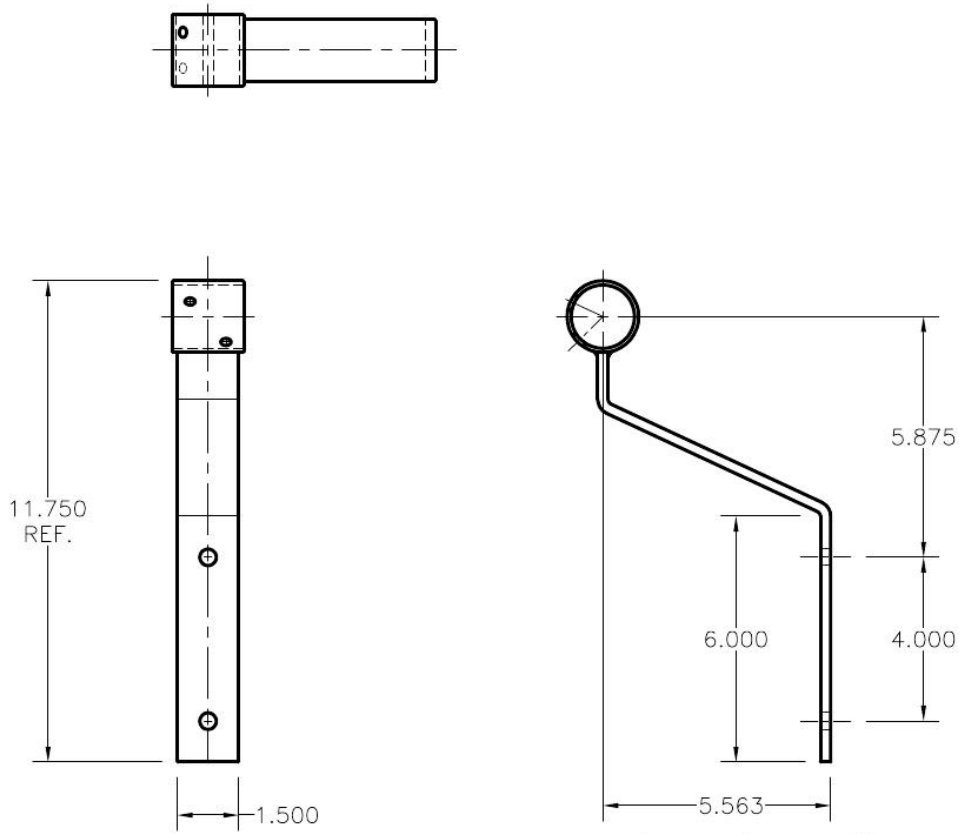

NOTES:

FINISH: POWDER COAT CHROME FINISH

REVISIONS				
REV	DESCRIPTION	DATE	BY	APPROVED
–	–	–	–	–
–	–	–	–	–
–	–	–	–	–
–	–	–	–	–
–	–	–	–	–
–	–	–	–	–
–	–	–	–	–
–	–	–	–	–
–	–	–	–	–

ITEM	QUANTITY	DWG. NO.	DESCRIPTION

DATE 07-30-02 | BY BEC

FILE C:\

TITLE SINGLE BALLET BAR

PROJECT BALLET BAR

TOLERANCES U.O.S. 0.0000=±.0005, 0.000=±.005, 0.00=±.01

REF. NO. 1001

PART NO. MS-00017 | REV A

SCALE N.T.S. | SIZE B | SHEET 1 of 1

AboutBallet.com